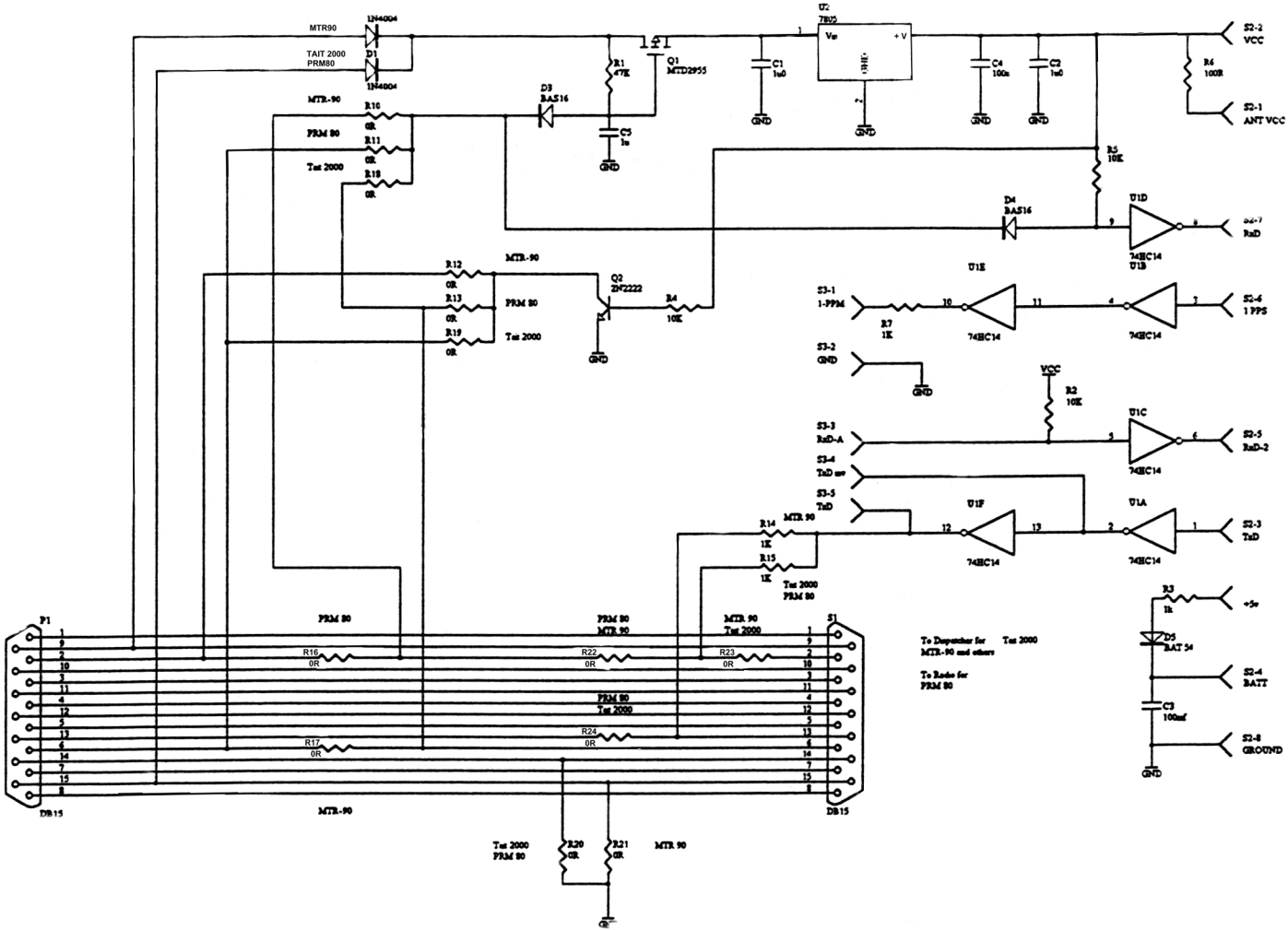
MTR90
TAIT 2000
PRM80
1N4004
D1
1N4004
MTR-90
R10
0R
PRM 80
R11
0R
Tat 2000
R18
0R
D3
BAS16
R1
47K
C5
1u
GND
Q1
MTD2955
C1
1u0
U2
7805
Vin
+V
GND
C4
100n
C2
1u0
R6
100R
S2-2
VCC
S2-1
ANT VCC
R5
10K
D4
BAS16
U1D
74HC14
U1B
S2-7
RxD
R12
0R
MTR-90
R13
0R
PRM 80
R19
0R
Tat 2000
Q2
2N2222
R4
10K
U1E
S3-1
1-PPM
R7
1K
74HC14
74HC14
S2-6
1 PPS
S3-2
GND
VCC
R2
10K
U1C
S3-3
RxD-A
74HC14
S2-5
RxD-2
S3-4
TxD en
S3-5
TxD
U1F
U1A
R14
1K
MTR 90
R15
1K
Tat 2000
PRM 80
74HC14
74HC14
S2-3
TxD
R3
1k
+5v
D5
BAT 54
S2-4
BATT
C3
100uf
S2-8
GROUND
P1
DB15
S1
DB15
PRM 80
MTR 90
Tat 2000
R16
0R
R22
0R
R23
0R
R17
0R
R24
0R
MTR-90
To Dispatcher for
MTR-90 and others
To Radio for
PRM 80
R20
0R
R21
0R